Transmission Congestion Management of the Restructured Nigerian Power System Using Generator Rescheduling

NDUBISI M. A[1], EZECHUKWU O. A[2], OKOZI S. O[3]
[1, 2] *Dept. of Elect. Engr. N. A.U., Awka*
[3] *Dept. of Elect. & Elect. Engr. FUTO, Owerri, Nigeria*

Abstract- In a restructured Power systems, the bidding strength for Generation Companies increases and there will be rise in generation. The Transmission is the middle man between generation and distribution which is expected to be robust enough to evacuate these increase in generation. The duty of the transmission network increases in a deregulated power system environment as a result of the different market players trying to maximize profit and increasing pressure on the existing transmission network. The resultant of these pressures is the congestion of the transmission network. Transmission congestion management will alleviate such congestion problems in the network. In this work, Generator Rescheduling was used to manage the congestion problem seen in the Nigerian transmission network. Load flow analysis carried out on the active 41-bus Nigerian Power system shows that there are congestions in 10 transmission lines affecting the major lines connecting the South East of the country and the Lagos environs. There were violations in operating voltages of 16 buses. When the active power of the generators were rescheduled, the result shows that the operating voltages of theses buses; Mando, Akangba, Lokoja, Aiyede, Ikeja-West were restored to the acceptable range while 6 of the 10 violated lines were relieved. Generator rescheduling could not solve all the problems of Transmission line Congestion because load centres were not considered before citing of generating stations.

Indexed Terms- Generator rescheduling, congestion, transmission, operating voltage, generation.

I. INTRODUCTION

In a restructured power system environment, the modus operandi of power business changes from the usual monopolistic nature of the vertically integrated system to the competitive nature of the deregulated structure. Different players are now expected to participate in the power business, the transmission network remains the common carrier for all the power transfers. Prior to the electricity reforms in Nigeria, the generation, transmission and distribution systems were managed by a single entity. However, due to the following factors; inadequate power generation capacity, inefficient usage of capacity, lack of capital for investment, ineffective regulation, high technical losses and vandalism, insufficient transmission and distribution facilities, inefficient use of electricity by consumers, inappropriate industry and market structure, unclear delineation of roles and responsibilities [1], electricity industry in Nigeria was pronounced restructured in 2013. The Transmission Company of Nigeria (TCN) was created as the Independent System Operator to regulate the business transactions of power between different Generation Companies (GENCOs) and the different Distribution Companies (DISCOs). The major aim of this restructuring is to ensure that Nigerians have enough electricity supply that will meet the needs of its citizen in the 21stcentury. In the modern restructured power industry, the role played by generation, transmission and distribution in power sector are independent [2]. The main benefits obtained from restructuring of power system are, cheaper electricity, efficient expansion planning, minimization of cost of electricity, available alternate supply and an improved service.

The usage of the transmission network increases in a deregulated power system environment. This is because the different market players want to maximize profit and puts more pressure on the existing transmission network. As a result of these pressures on the grid, there will be an increase in such technical problems in power system such as increase in line losses, violation of line flow limit, risk of power system stability etc. The resultant of these is the congestion of the transmission network. Transmission congestion is the operating condition of the network in which there is insufficient transmission capability to implement all the business transactions of power at the same time as a result of unexpected contingencies. In the deregulated power system, the challenge of congestion management for the transmission system operator is to create a set of rules that ensure sufficient control over producers and consumers (generators and loads) to maintain an acceptable level of power system security and reliability in both the short term (real-time operations) and the long term (transmission and generation construction) while maximizing market efficiency [3]. The rules must be robust, because there will be many aggressive entities seeking to exploit congestion to create market power and increased profits for themselves at the expense of market efficiency so that rules should also be fair, transparent and clear to all participants in power market [4]. Congestion of the transmission network can be alleviated through the following processes: generator rescheduling, the use of FACTS devices and load curtailment. Different techniques of managing congestion in transmission network have been reported in literature [5-8]. In this work, rescheduling of active power of generators will be employed in managing the congestion in Nigerian transmission network. This becomes necessary especially as the electricity industry in Nigeria is under deregulation.

II. THE NIGERIAN TRANSMISSION NETWORK

The transmission lines are the corridor of power between the generation and the distribution hence an important part of power systems. The Transmission Company of Nigeria (TCN) manages the electricity transmission network in the country. The Nigerian transmission network is made up of high voltage substations with a total (theoretical) transmission wheeling capacity of 7,500MW and over 20,000km of transmission lines. Currently, transmission wheeling capacity (5,300MW) is higher than average operational generation capacity of 3,879MW but it is far below the total installed generation capacity of 12,522MW [9].

The growth of transmission network should be in line with the expected increase in generation. In a restructured power system network, different generating companies are expected to compete for opportunities to sell power to different buyers (Distribution companies) and all these transactions must pass through the transmission network hence the need to check if the network is robust enough for this increase or the need to expand the network. The growth in generation station expansion in Nigeria are shown in Table. 1. The new improved active Nigerian 41-bus system was considered in this work. These buses includes the generating stations contributing power to the grid. The one-line diagram of the 41-bus Network is shown in Fig. 1

Table 1: Nigerian Generation Power Growth

S/N	Period	Installed Capacity
1.	1960-1970	292
2.	1971-1980	0
3.	1981-1990	1844
4.	1991-2000	0
5.	2001-2010	3357
6.	2010-2019	3223
7.	Yet to be commissioned	7335

From Table 1, there has been a surge in the installed capacity of generating stations since the power reform in 2005 and eventual restructuring in 2013. Therefore, great concern should be made on the transmission network to ensure its readiness in evacuating all these power when fully operational. One of the means of accessing the capacity of the transmission network is the Transmission Congestion Management.

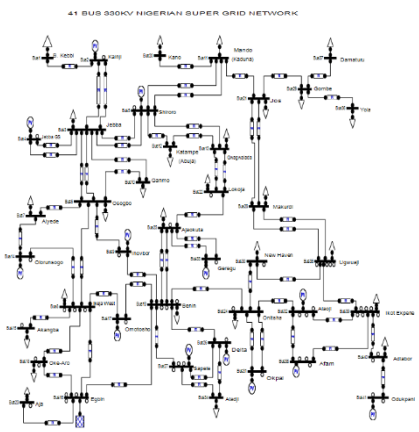

Fig. 1: 41 Bus 330KV Nigerian Super Grid Network

III. GENERATOR RESCHEDULING

The problem in transmission congestion management can be alleviated through two methods. These are the cost-free method and the non-cost-free method [10-12]. In the cost-free technique, the marginal costs are neglected though the capital costs are considered. They includes; load shedding or outaging of congested lines,operation of transformer taps or phase shifters and FACTS devices. While the non-cost-free techniques are; load curtailments and rescheduling generation. The transmission congestion management using generator rescheduling is implemented by increasing or decreasing the active power output of the generators. This change is however associated with costs which is dependent on the bidding of generator per Mega Watt hour (MWh) increment in power.

IV. PROBLEM FORMULATION

The main aim of congestion management is taking up of the adequate control actions in order eliminate overloads in the system by generation dispatch [13]. In optimal rescheduling of generation, the objective of the congestion management is to ease the congestion while the cost of generation is minimized subject to the power flow equations, ramp rates of generators and line flow constraint. The objective is to minimize equation 1 subject to the inequalities in equation 2 to 6.

Minimize $\sum_{\substack{i=1\\ \neq s}}^{NG} (C_i\,(\Delta P_i)\,\Delta P_i)$ (1)

Subject to:

$$\sum_{\substack{i=1\\ \neq s}}^{NG} \left((TCD\ F_i^k)\Delta P_i\right) + F_k^0 \leq F_k^{max}$$

k= 1, 2, …..,N_L (2)

$$\Delta P_i^{min} \leq \Delta P_i \leq \Delta P_i^{max}$$

i = 1, 2. ….., $N_{G,}$ $i \neq s$ (3)

$$P_i^{min} \leq P_i + \Delta P_i \leq \Delta P_i^{max}$$

i = 1, 2. ….., $N_{G,}$ $i \neq s$ (4)

$P_{Gm} - P_{Dn} = 0$ (5)

$\sum_m P_{Gm}^t - \sum_n P_{Dn}^t = 0 \quad t = 1, 2, \ldots\ldots, N_t$ (6)

($C_i(\Delta P_i)$ is the incremental or decremental bid submitted by GENCO-*i*,

ΔP_i is the real power adjustment at GENCO-*i*,

NG is the number of GENCOs in the sensitive zone.

Equation (2) is the line flow constraint formed using TCDF for congested lines.

F_k^0 is the power flow caused by all contracts previously settled on line-k

F_k^{max} is the line flow limit of line-k connecting buses *i* and *j*.

N_L and N_t are the total number of lines and total transactions considered respectively.

Equation (3) represents ramp limits for GENCOs.

Equation (4) limits the output each GENCO within its maximum and minimum limits.

Equations (5) and (6) are the power flow equations for bilateral and multilateral contracts between *m* and *n* buses respectively.

V. DATA AND SIMULATION

The Simulation software used in this work is Power System Analysis Toolbox (PSAT). PSAT is a MATLAB toolbox for electric power system analysis and simulations. PSAT computational engine is purely MATLAB – based and the Simulink environment is used only as graphical tools. The

installed generating capacity of the fourteen (14) generating stations and their corresponding Reactive power limits used in this work are shown in Table 2 while the fuel cost data are shown in Table 3. A comprehensive load flow analysis of the Network was carried out to pinpoint the weaknesses in the Network. Newton Raphson technique was employed to carry out this load flow analysis.

Table 2: Data for the Nigerian Power Generation Stations

S/N	Bus No.	Operating Gen. Capability Gen. MW	Voltage Mag.	Installed Gen. Capacity		Mvar Limits	
				Min. MW	Max. MW	Min.	Max.
1	2	292	1	76	760	14	143
2	4	460	1.030	54	540	23	225
3	5	450	1	60	600	22	220
4	9	337	1	42	420	17	165
5	14	266	0.961	30	304	13	130
6	16	722	1.012	132	1320	0	0
7	17	280	1	30	304	15	149
8	26	480	1.012	90	900	24	235
9	27	240	1.012	72	720	12	117
10	31	400	1.012	45	450	22	220
11	32	240	1	50	504	12	117
12	33	385	1	41	414	19	188
13	38	580	1.003	73	726	28	284
14	41	360	0.994	63	625	18	176

Table 3: Fuel Cost Data of the Power Generation Stations

S/N	Bus No.	Cost Coefficient		
		a(₦/MWh)	b(₦/MWh)	c(₦/MWh)
1	2	0	0	0.014
2	4	0	0	0.012
3	5	0	0	0.013
4	9	525.7	61.3	0.012
5	14	237.87	48	0.031
6	16	497	52.3	0.058
7	17	229.8	56	0.092
8	26	192.76	40.32	0.042
9	27	197.87	33	0.098
10	31	127	15	0.020
11	32	179	20.4	0.012
12	33	692.9	78.55	0.031
13	38	117.76	37.55	0.012
14	41	155	51.7	0.056

VI. RESULTS AND DISCUSSIONS

The results of the load flow analysis of the Network in Fig. 1 shows that there are voltage violations at some of the buses and MVA violations on some lines as shown in Table 4 and Table 5 respectively. These results were based on the Nigerian operating voltage range of (0.95 - 1.05 P.U) of 330kV and MVA limits of 0.7 P.U of standard Nigerian MVA limit.

Table 4: Bus Voltage Violations

S/N	Bus No.	Voltage (kV)	Bus Violation type
[1]	1	293.2535545	under voltage
[2]	11	312.4498136	under voltage
[3]	12	305.3221285	under voltage
[4]	13	307.8620548	under voltage
[5]	15	308.4239716	under voltage
[6]	20	303.0401725	under voltage
[7]	21	273.7928104	under voltage
[8]	22	310.7697535	under voltage
[9]	28	270.7862923	under voltage
[10]	29	234.0070032	under voltage
[11]	30	284.0169595	under voltage
[12]	35	282.2990359	under voltage
[13]	36	226.5181473	under voltage
[14]	37	228.0053515	under voltage
[15]	7	311.6840354	under voltage
[16]	8	311.7644693	under voltage

Table 5: MVA Flow Violations on the Line

S/N	Lines	Line Names	MVA Flow
1.	Line 16	Egbin – Benin	1077.48657
2.	Line 23	Benin – Onitsha	723.480437
3.	Line 17	Ikeja West – Oke-Aro	632.880749
4.	Line	Oke-Aro –	674.91

	18	Egbin	7357
5.	Line 19	Ikeja west–Omotosho	557.603784
6.	Line 27	Benin–Sapele	724.429967
7.	Line 34	Onitsha–Alaoji	652.743581
8.	Line 55	Ikot Ekpene–Ugwaji	787.038531
9.	Line 62	Adiabor–Odukpani	570.866823
10.	Line 14	Egbin – Ikeja West	527.694941

To reschedule the generators in other to reduce/eliminate those violations, the following assumptions were made,

- The Generators are at Automatic generation Control (AGC)
- The reactive Power Interaction is neglected
- The effect of valve point loading is neglected
- Voltage operating outside 0.95PU – 1.05PU (313.5kV – 346.5kV) is considered violation.
- The system loads are Fixed
- %MVA Loading above 70% is considered as a violation

Fig. 2 is the simulink diagram of the 41-bus Network of Fig. 1 with the generators rescheduled. The bus voltages and the MVA flows in the affected buses and lines are shown in Table 6 and Table 7 respectively.

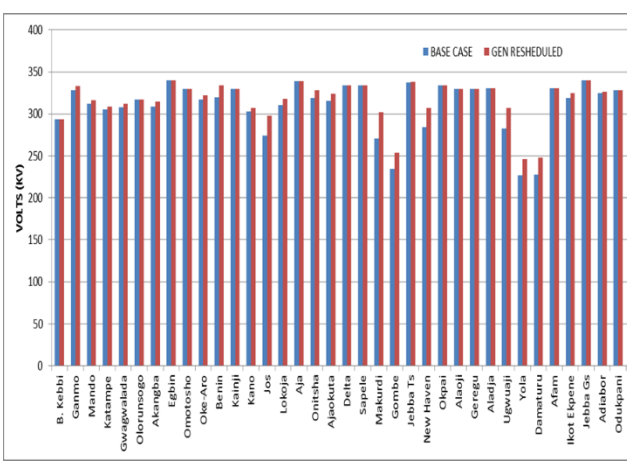

Fig.2: Bus Voltages after rescheduling the Generators.

Fig. 2 shows the voltage profile of the network after the generators have been rescheduled. There was a general improvement in the voltages at the load buses.

Table 6: Voltage profiles after Rescheduling

S/N	Bus No.	Base Case Voltage (kV)	Gen. Resched. Voltage (kV)	Bus Violation type
1.	1	293.253555	293.253555	under voltage
2.	11	312.449814	316.468348	operating voltage
3.	12	305.322129	308.899350	under voltage
4.	13	307.862055	312.142781	under voltage
5.	15	308.423972	314.607544	operating voltage
6.	20	303.040173	307.216388	under voltage
7.	21	273.792810	297.460821	under voltage
8.	22	310.769754	318.053107	operating voltage
9.	28	270.786292	302.060773	under voltage
10.	29	234.007003	254.235731	under voltage
11.	30	284.016960	306.984327	under voltage
12.	35	282.299036	306.631360	under voltage
13.	36	226.518147	246.099501	under voltage
14.	37	228.005352	247.7152664	under voltage
15.	7	311.684035	316.995160	operating voltage
16.	8	311.764469	317.880042	operating voltage

From Table 6, the voltages of five buses are restored to the acceptable operating voltage range, the buses are 2, 5, 8, 15 and 16. While the rest of the buses that were violated during load flow experienced increased voltage after rescheduling, though they are still short of the acceptable operating voltage range.

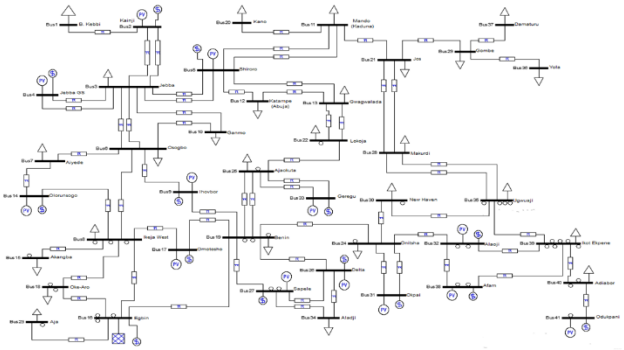

Fig. 3: Modelled 41 Bus 330kv Nigerian Network - Generator Rescheduled.

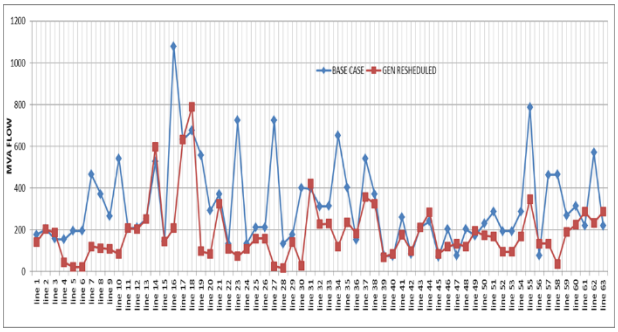

Fig. 4: MVA Flow after rescheduling the Generators.

Table 6: MVA Flow Violations on the Line

S/N	Lines	Line Names	Before Rescheduling	After Rescheduling
			MVA Flow	MVA Flow
1.	Line 16	Egbin – Benin	1077.48657	598.5455
2.	Line 23	Benin –Onitsha	723.480437	73.3666
3.	Line 17	IKeja West – Oke-Aro	632.880749	633.3464
4.	Line 18	Oke-Aro – Egbin	674.917357	788.5279
5.	Line 19	Ikeja west– Omotosho	557.603784	97.7532
6.	Line 27	Benin–Sapele	724.429967	26.6236
7.	Line 34	Onitsha–Alaoji	652.743581	121.031
8.	Line 55	Ikot Ekpene– Ugwaji	787.038531	346.5156
9.	Line 62	Adiabor– Odukpani	570.866823	234.7489
10.	Line 14	Egbin – Ikeja West	527.694941	598.5455

From table 6, it is observed that out of the ten violations that occurred, only four transmission lines which are lines 16, 17, 18, and 14, exceeded their line limits after the generators were rescheduled.

VII. CONCLUSIONS AND RECOMMENDATION

This paper presents generator rescheduling as a means of reducing congestion in transmission line. This is very important for the Nigerian Power systems undergoing reforms and restructuring to put the transmission Network ready for increased generation as a result of this restructuring. The generator rescheduling was able to boost the voltage of over 30% of the violated bus voltages which is a better alternative to load shedding. Also 60% of lines violations were alleviated as shown in Table 6.

In other to further reduce this bus and lines violations, other options like application of FACTs device SVC, TCSC and combination of the two are recommended.

REFERENCES

[1] Overview of the Nigerian Power Sector Reform Investor Forum Presentation BPE

[2] Y. R. Sood, N. P. Padhy, and H. O. Gupta, “Deregulated Model and Locational Marginal Pricing,” Electrical Power System Research, vol. 77, issue 5-6, pp. 574-582, 2010.

[3] R.Singh, Y.R. Sood, N.P. Padhy, “Development of renewable energy sources for Indian power sector moving towards competitive electricity market”, PES- 2009, IEEE, Power & Energy Society General Meeting, pp 1 – 6, 2009.

[4] Y.R Sood, R. Shrivastava, and N.K Sharma, “Assessment of restructured Indian power sector: Availability, demand and shortage”, Proceedings of the International Conference on Power Systems, Energy and Environment, pp 118-122, 2014.

[5] A.Kumar, S. C. Srivastava, and S. N. Singh, “Congestion management in competitive power market”, A bibliographical survey,” Elect. Power Syst. Res., vol. 76, pp. 153–164, 2005.

[6] Y. H. Song and I.-F. Wang," Operation of Market Oriented Power Systems", New York: Springer, 2003, chapter.6.

[7] K. L. Lo, Y. S. Yuen, and L. A. Snider, "Congestion management in deregulated electricity market ," in Proc. Int. Conf. Electric Utility Deregulation and Restructuring and Power Technologies, London, U.K., 2000, pp. 47–52.

[8] R. S. Fang and A. K. David, "Transmission congestion management in an electricity market", IEEE Trans. Power Syst., vol. 14, no. 3, pp. 877–883, Aug. 1999.

[9] Nigerian Electricity Regulatory Commission, https://nerc.gov.ng/index.php/home/nesi/404-transmission.

[10] G. Zwe-LEE, "Particle Swarm Optimizations to solve the economic dispatch considering the generator constraints", IEEE transaction on power systems, Vol 18, No.3, pp. 1187—2123, August 2003.

[11] D.M Vinod Kumar and C. Venkaiah," Fuzzy PSO Congestion Management using sensitivity based optimal active power rescheduling of generators", journal of Electrical Engineering and Technology Vol 6, No.1, pp. 32—41, 2011.

[12] J. A Conejo, F. Milano and R.G Bertrand, "Congestion management ensuring voltage stability", IEEE Trans. Power Syst., 21(1), 357—364, 2006.

[13] R. Saranyal, K. Balamurugan and M. Karuppasamypandiyan, "Artificial Bee Colony Algorithm Based Congestion Management in Restructured Power System", Indian Journal of Science and Technology, Vol 8(S7), 171–178, April 2015.